1. Carpe Iter Holder

1.1. The Carpe Iter Holder is specifically designed for the Ci Pad. Do not use the Holder for any other equipment than the Device.

1.2. The Holder will ensure secure mounting and will also provide continuous charging for the Device through the mating pads on the back on the Device.

1.3. The Holder includes a power source that was designed specifically for the Device. **DO NOT use the power source to power any other equipment than the Device**.

1.4. Description:

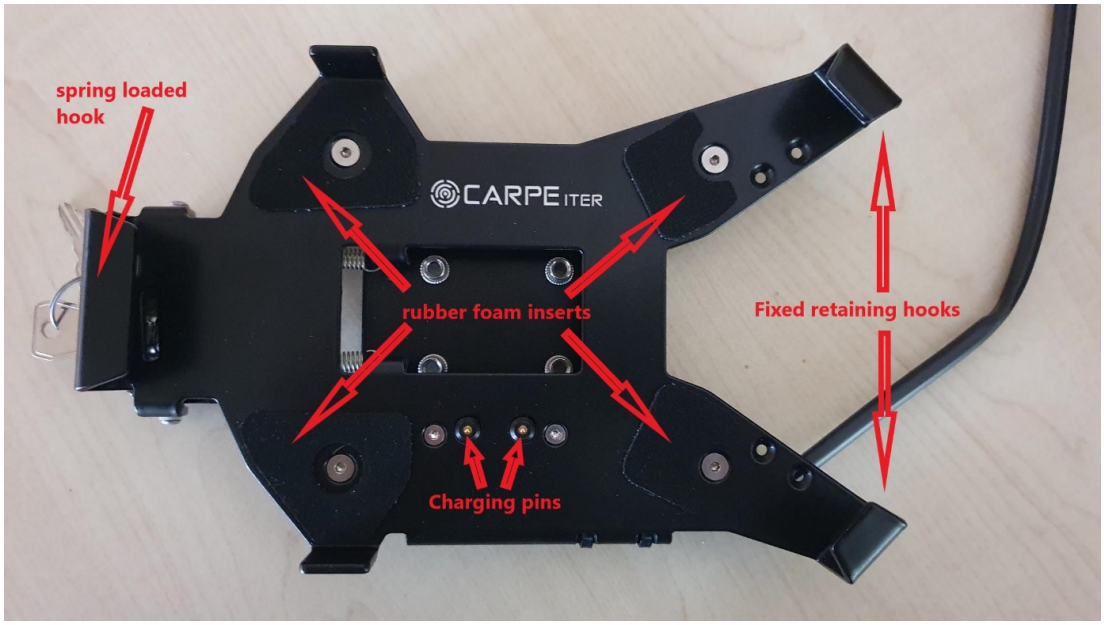

1.5. Holder installation requires at least basic mechanical and electrical skills. If you are in doubt, have the Holder installed by a professional workshop.

1.6. Protect the charging pins in the Holder from mechanical damage. Especially take care when inserting the Device into the Holder not to hit the charging pins with the Device – they could be damaged inside even if you cannot see any damage with naked eye. Damaged charging pins will cause charging problems (no charging or insufficient charging).

1.7. Protect the charging pins from being connected to one another with electrically conductive materials.

1.8. Mounting Holder

1.8.1. The base plate of the Holder contains 6 nuts for M5 screws. Screws are not included.

1.8.2. The mounting nuts create a standard AMPS hole pattern (30x38mm) in the landscape orientation.

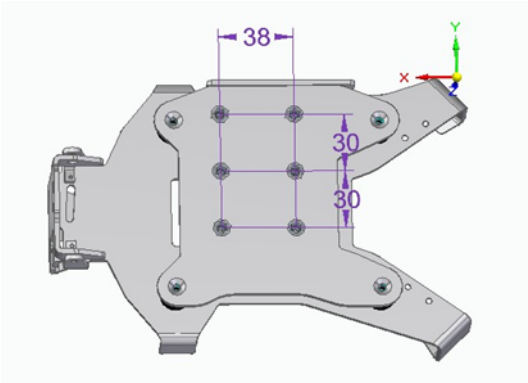

1.8.3. When Carpe Iter mounting brackets (paid accessory) are used, the Holder can be mounted horizontally and vertically.

1.8.4. The Holder must be mounted by at least 4 screws forming a rectangular shape to ensure stability and vibration resistance.

1.8.5. Whenever possible, mount the Holder as close to its centerline as possible (i.e. use mounting nuts in the center, not on the edge of the base plate).

1.8.6. The Holder and the Device have combined weight of approximately 1kg.

1.8.7. Make sure the Holder is mounted on a solid structure on your motorbike (handlebar or other support structure designed to carry heavy equipment) that can carry the weight of the Holder and the Device reliably.

1.8.8. It is imperative that Holder is mounted in such a way that engine vibrations and shocks from road are kept to minimum. Excessive vibrations and shocks in the Holder might cause a premature failure of the charging pins and / or of the Device. This applies especially, if you plan to use the Holder and the Device off the paved roads.

1.8.9. Mounting tips:

1.8.9.1. Soft mounting style (e.g. Ram Mounts balls) is not recommended for motorcycles. If you must use this mounting style for some reason, use at least C size ball (1,5 inch);

1.8.9.2. Although some motorcycles provide GPS mounting brackets (e.g. Yamaha T700), they might not be strong enough to support heavy equipment without additional reinforcement;

1.8.9.3. Some aftermarket “rally” cockpits actually enhance engine vibrations because of their design, which can cause charging problems, premature charging pins failure and/or Device failure;

1.8.9.4. In case excessive vibrations manifest in the Holder, consider adding extra dampening between the mounting point and the holder (rubber mat, rubber spacers, etc.);

1.8.9.5. Standard aftermarket smart phone brackets are generally not strong enough to carry the combined weight of the Holder and the Device.

1.9. Inserting Device into Holder

1.9.1. Correct Device placement / orientation in the Holder (M8 charging connector is facing away from the spring-loaded retaining hook):

1.9.2. Never put the Device into the Holder in any other orientation than indicated above. It will prevent charging through the Holder and it will damage hardware buttons.

1.9.3. Correct Device inserting procedure:

1.9.3.1. **Close all port flaps properly** (see Section 4.5 and 4.6). If the flaps remain even slightly open when you insert the Device into the Holder, they will be damaged.

1.9.3.2. Open the spring-loaded retaining hook with one hand. With the Device slightly lifted, push the Device gently into the fixed retaining hooks with the other hand:

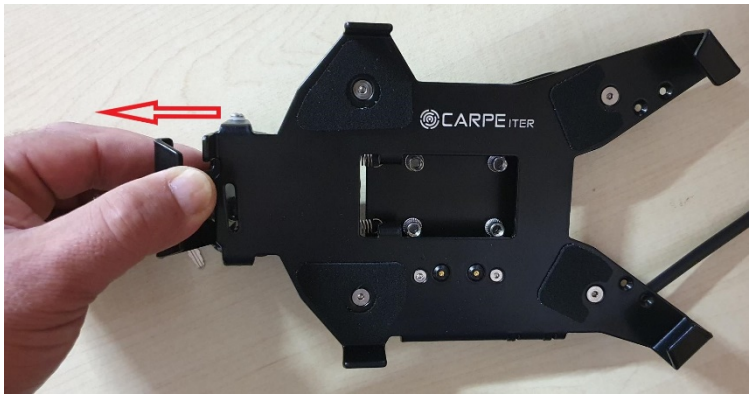

1.9.3.3. Make sure the Device is properly aligned with location elements on the longer sides of the Holder;

1.9.3.4. Press the Device gently into the Holder. Close the spring loaded retaining hook;

1.9.3.5. If the Device was properly aligned and all port flaps are properly closed, very little force is required to insert the Device into the Holder. If the Device would not get inserted into the Holder easily, check the Holder for bends, check the Device for proper alignment, check that port flaps are closed properly and try again.

1.9.3.6. using the lock in the Holder is optional (the Device will not fall out of the Holder even when the lock is not engaged).

1.9.4. When properly inserted into the Holder, the Device will not **freely** move within the Holder (=slack). **DO NOT use force** to check, if the Device has too much slack in the Holder (you might bend the Holder and/or damage the charging pins). If you feel the Device has a slack in the Holder, check the Holder for bends, check rubber foam inserts for excessive wear. The rubber foam inserts are available as spare part. If the Device is slack in the Holder, it can cause charging issues and premature failure of the charging pins in the Holder and/or Device failure due to excessive vibrations and shocks.

1.10. Maintenance

1.10.1. Regularly check for loose screws and torque them as required;

1.10.2. Regularly check the Holder for bends (especially after a crash). Bent Holder might not ensure correct charging and secure retention of the Device;

1.10.3. Regularly clean the charging pins with electrical contacts cleaner. It is recommended that you use a cleaner specifically designed to remove oxidation;

1.10.4. Thoroughly lubricate the charging pins with electrical contacts oil or grease regularly and after each cleaning cycle (make sure the lubricant enters the charging pin body and does not stay only on the outside);

1.10.5. Use of electrical contact grease is recommended – make sure you push the grease inside the charging pin (compress the pin, apply grease. Compress the pin several times to make sure the grease enters inside the body of the pin). Using electrical contact grease will extend the charging pins life-span. It is recommended that you apply electrical contact grease on the charging pins before first use. It is NOT recommended that you use electrically *conductive* grease – it can cause short-circuit between the charging pins, if applied in excessive amounts;

1.10.6. All rubber and plastic parts and charging harness are considered a consumable – replace as necessary to retain proper function. All those items are available as spare parts.

2. Power source

2.1.1. The power source included with the Holder contains 1 set of input wires and 2 connectors on the output. The output connectors may be connected to the Holder and M8 charging cable simultaneously:

2.1.2. M8 charging cable **must NOT be connected to a second power source**, when charging the Device from both the Holder and M8 charging connector, or it will damage or destroy the Device.

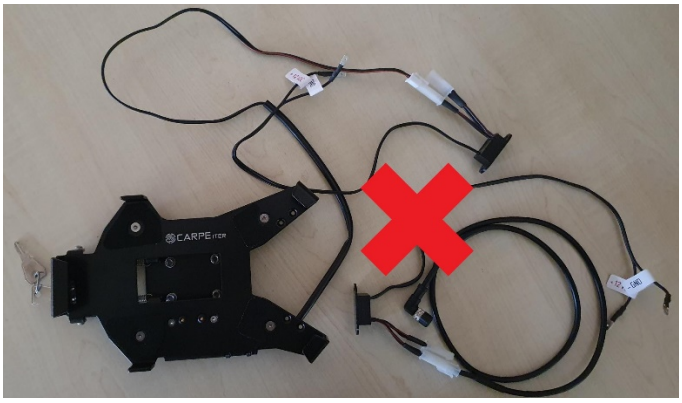

2.1.3. The power source requires direct current (DC) input with voltage exceeding 13,1V. That is the voltage level a modern motorcycle or a car provides (exceeds) with engine running, **if it's alternator is functioning correctly**.

2.1.4. The power source will switch-off automatically when the input voltage drops below 12,9V to conserve your vehicle's battery.

2.1.5. When voltage level exceeds 13,1V, the power source will turn on within 30 seconds (soft start). Exceeding the operating voltage threshold will be indicated by a stable green LED on the power source.

2.1.6. Regardless the automated switching function of the power source, it is recommended that you connect it to your vehicles auxiliary power outlet linked to the ignition (the outlet is only powered, when ignition is ON).

2.1.7. If the power source is connected directly to the vehicle's battery or "always on" auxiliary power outlet, the power source will turn on or will be caught in on/off cycle when you connect your vehicle to a battery charger. This frequent ON/OFF condition might cause premature power source failure. It is recommended that you disconnect the power source from your vehicle especially in case you keep the vehicle connected to a charger for extended periods of time (e.g. winter storage).

2.1.8. Remove the Device from the Holder and disconnect the M8 charging cable from the Device, when you charge your vehicle's battery.

2.1.9. NOTE: if you use LiFe battery in your vehicle and you connected the power source directly to the battery or "always on" auxiliary power outlet, the power source will not turn off when engine is stopped, because LiFe batteries have higher nominal voltage than standard led-acid batteries.

2.1.10. The power source requires that the electrical system of your vehicle can handle a stable power draw of at least 15W (approx. 1A at 14V).

2.1.11. If your vehicle cannot provide the minimum voltage required for the power source operation (13.1V), there is an alternative power source available as paid accessory, which will engage at 10V, but which will NOT provide a protection of the vehicle's battery against depletion in case you leave the Device charging in the Holder with engine stopped. Even a single full charge of the Device with engine stopped (and alternator not generating power) might deplete your vehicle's battery so deeply that you will not be able to start the engine.

2.1.12. The power source includes reverse polarity and over-heating protection. It will only provide overvoltage protection up to 20VDC on input (maximum voltage rating). Exceeding the maximum voltage rating will destroy the power source and, as a consequence, might also destroy the Device.

2.1.13. When installing the power source on your motor vehicle, make sure to connect the leads on the input in the correct polarity. The input leads are equipped with 6,3mm faston tab. Some motorcycles have the corresponding female sockets on their auxiliary power sockets. you can also connect the power source directly to the battery, but you will need to use cable extender **with a fuse** (5A fuse is recommended). **NEVER connect the power source directly to the vehicle battery without implementing a fuse**. When you connect the battery to your vehicle auxiliary power outlets, those should already be equipped with a fuse (check your vehicle specifications to verify this).

2.1.14. Battery extension cable with 5A fuse box and M6 loops that mates with our power source is available as optional accessory):

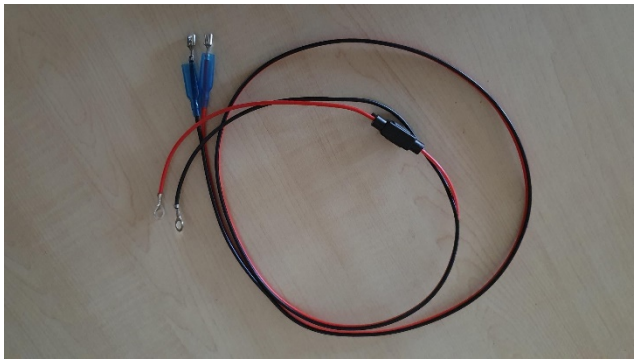

2.1.15. DO NOT change the stock connectors on the power source's output leads. Any tempering with wires and connectors on the output will void your warranty for both the Holder and the Device and we will NOT provide any assistance with debugging possible issues in such case.

2.1.16. The connectors on both the output and input of the power source are designed to be placed under your vehicle's mask or fairing and be protected from elements that way. In case it is not possible on your vehicle, wrap the connectors with e.g. black electrician's tape after installation to prevent short circuit from water ingress.

2.1.17. It is recommended that you apply electrical contact grease on all connectors between Holder and power source and between the power source and your vehicle.

2.1.18. The power source can be operated in ambient temperatures up to 60°C. The output current generated by the power source might decrease, when ambient temperature exceeds 50°C. Do not place the power source close to your vehicle's engine or cooling radiators, or overheating can occur.